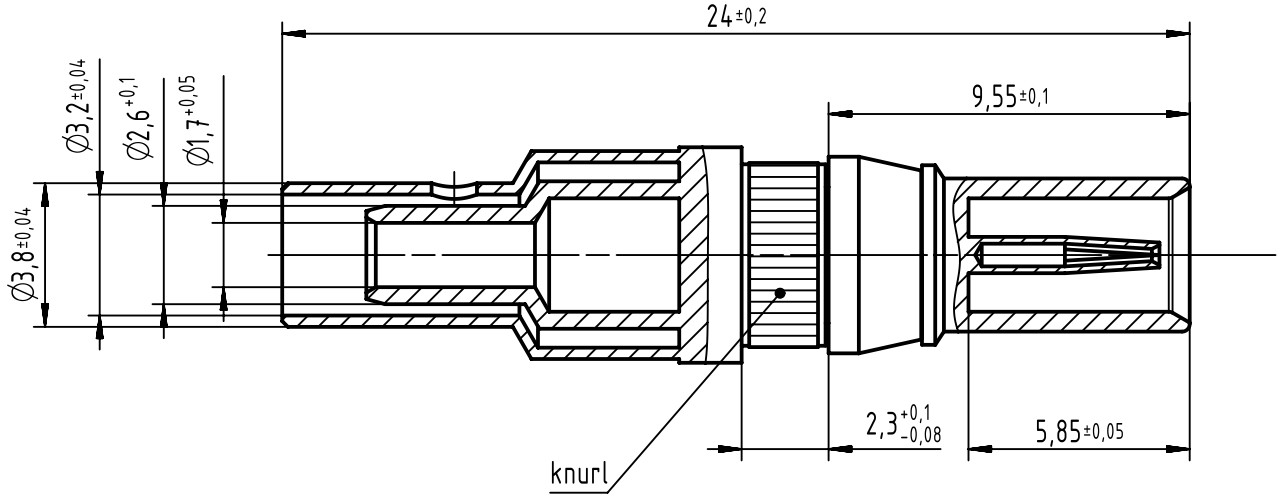

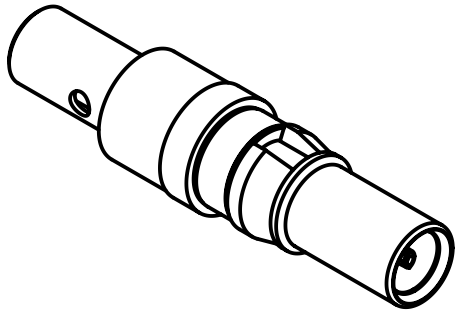

All Dimensions in mm Original Size DIN A4	Scale 5:1	Free size tol. DIN 41626-2		Ref. Sub. TB 09 03 000 6274 30079 24.07.02	
All rights reserved Department EC PD - DE	Created by ELLERMANN	Inspected by DAHMS	Standardisation HOFFMANN	Date 2013-12-18	State Final Release
HARTING Electronics GmbH D-32339 Espelkamp	Title DIN Signal female contact coax 50 Ohm str solder crimp				Doc-Key / ECM-Nr. 100083425/UGD/003/B 500000068957
	Type TB	Number 09030006274		Rev. B	Page 1/1

A4